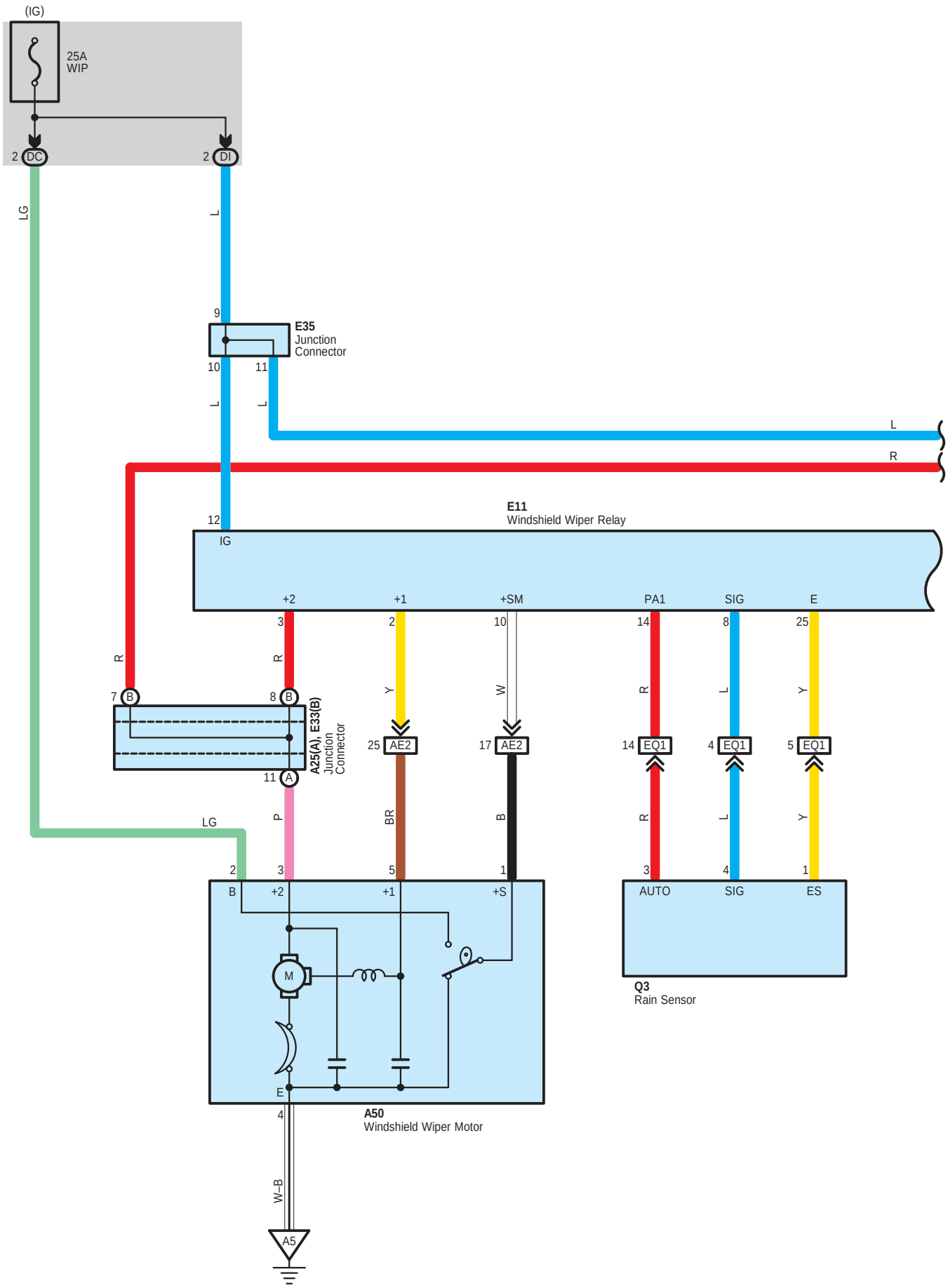
(IG)
25A
WIP
2 DC
2 DI
LG
L
9
E35
Junction
Connector
10
11
L
L
L
R
12
IG
E11
Windshield Wiper Relay
+2
+1
+SM
PA1
SIG
E
3
2
10
14
8
25
R
R
Y
W
R
L
Y
7 B
8 B
A25(A), E33(B)
Junction
Connector
25 AE2
17 AE2
14 EQ1
4 EQ1
5 EQ1
11 A
LG
P
BR
B
R
L
Y
2
3
5
1
3
4
1
B
+2
+1
+S
AUTO
SIG
ES
M
Q3
Rain Sensor
E
4
A50
Windshield Wiper Motor
W–B
A5

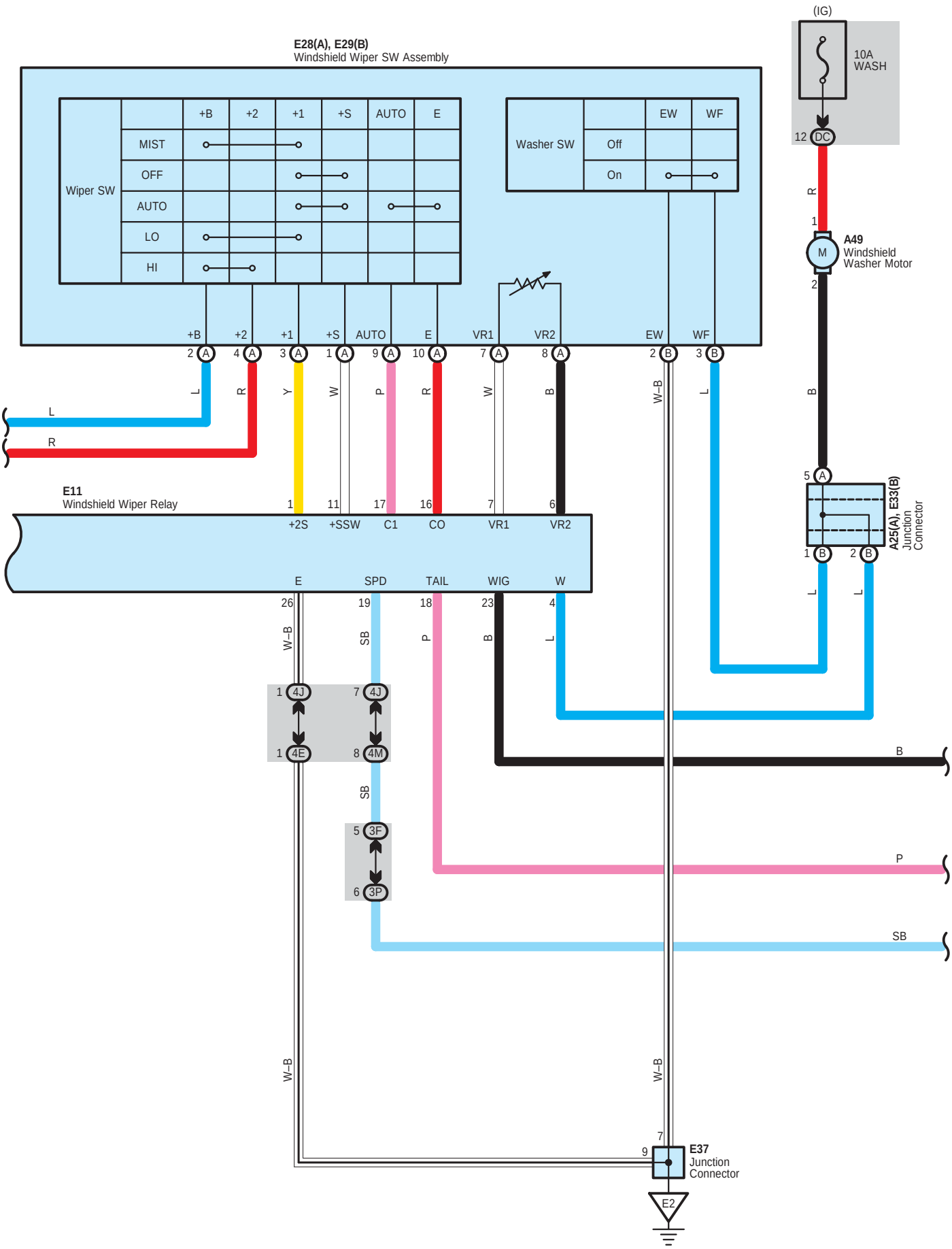
E28(A), E29(B)
Windshield Wiper SW Assembly
Wiper SW
+B
+2
+1
+S
AUTO
E
MIST
OFF
AUTO
LO
HI
Washer SW
EW
WF
Off
On
VR1
VR2
(IG)
10A
WASH
12 DC
A49
Windshield
Washer Motor
M
E11
Windshield Wiper Relay
+2S
+SSW
C1
CO
VR1
VR2
E
SPD
TAIL
WIG
W
A25(A), E33(B)
Junction
Connector
4J
4E
4M
3F
3P
E37
Junction
Connector
E2
L
R
Y
W
P
B
W–B
SB

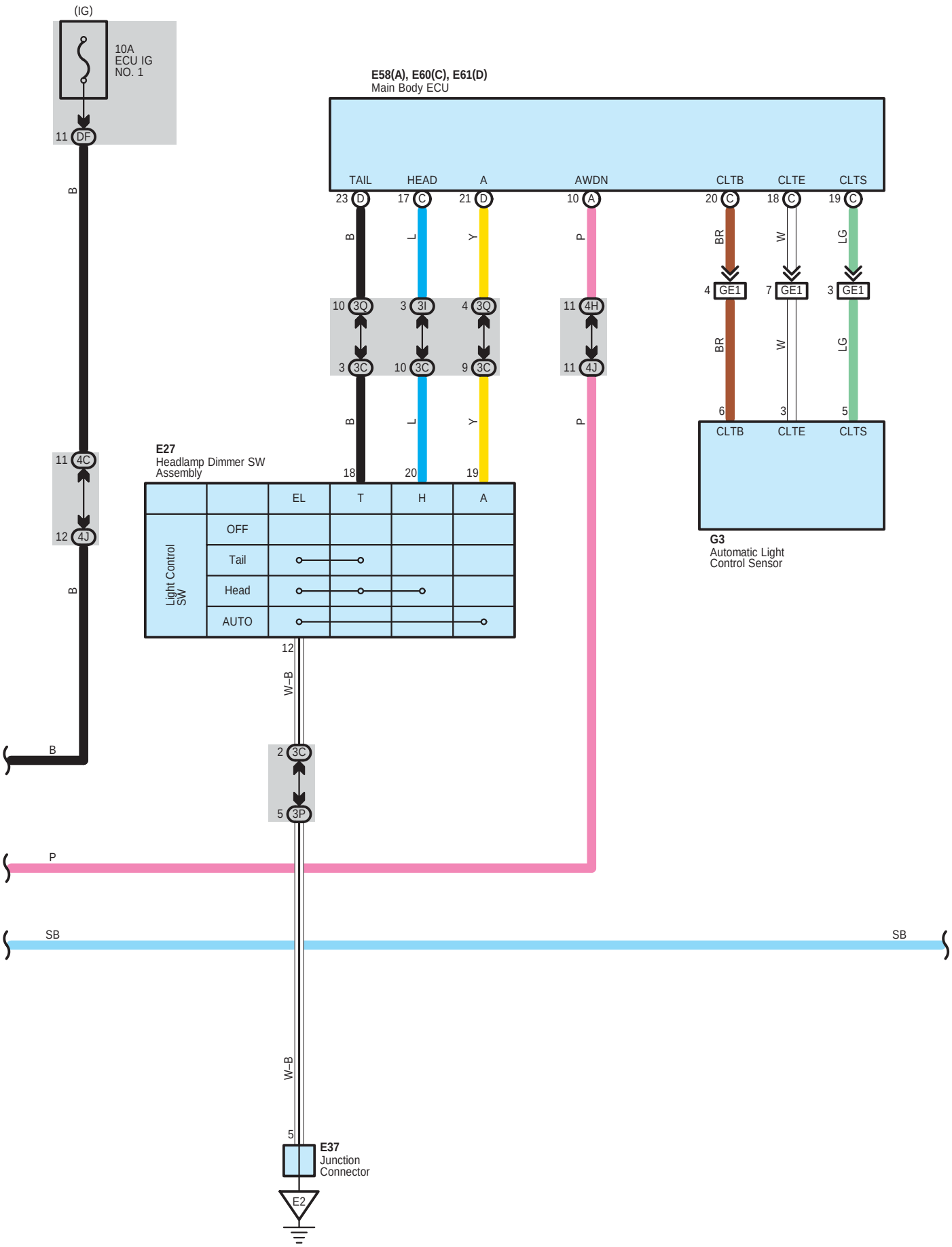
(IG)
10A
ECU IG
NO. 1
11 DF
B
E58(A), E60(C), E61(D)
Main Body ECU
TAIL
HEAD
A
AWDN
CLTB
CLTE
CLTS
23 D
17 C
21 D
10 A
20 C
18 C
19 C
B
L
Y
P
BR
W
LG
4 GE1
7 GE1
3 GE1
10 3Q
3 3I
4 3Q
11 4H
3 3C
10 3C
9 3C
11 4J
B
L
Y
P
BR
W
LG
6
3
5
CLTB
CLTE
CLTS
G3
Automatic Light
Control Sensor
11 4C
12 4J
B
E27
Headlamp Dimmer SW
Assembly
18
20
19
EL
T
H
A
Light Control
SW
OFF
Tail
Head
AUTO
12
W–B
B
2 3C
5 3P
P
SB
SB
W–B
5
E37
Junction
Connector
E2

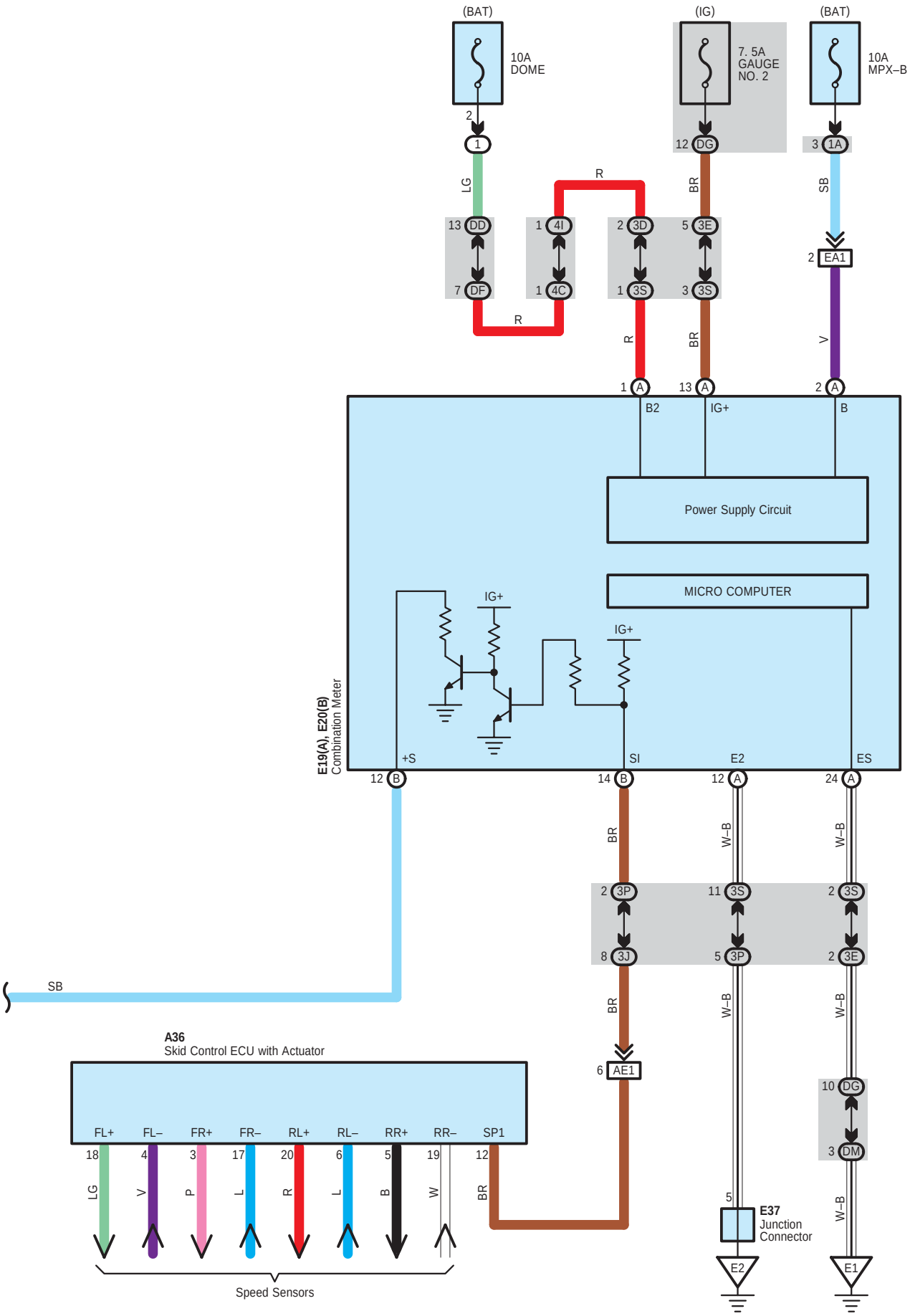
(BAT)
10A
DOME
(IG)
7. 5A
GAUGE
NO. 2
(BAT)
10A
MPX–B
2
1
LG
13 DD
7 DF
R
1 4I
1 4C
R
2 3D
1 3S
R
12 DG
BR
5 3E
3 3S
BR
3 1A
SB
2 EA1
V
1 A
13 A
2 A
B2
IG+
B
Power Supply Circuit
MICRO COMPUTER
IG+
IG+
E19(A), E20(B)
Combination Meter
+S
SI
E2
ES
12 B
14 B
12 A
24 A
BR
W–B
W–B
2 3P
8 3J
11 3S
5 3P
2 3S
2 3E
SB
BR
W–B
W–B
A36
Skid Control ECU with Actuator
6 AE1
10 DG
3 DM
FL+
FL–
FR+
FR–
RL+
RL–
RR+
RR–
SP1
18
4
3
17
20
6
5
19
12
LG
V
P
L
R
L
B
W
BR
5
E37
Junction
Connector
W–B
E2
E1
Speed Sensors

: Parts Location

Code		See Page	Code		See Page	Code		See Page
A25	A	60	E20	B	58	E37		58
A36		55	E27		58	E58	A	59
A49		55	E28	A	58	E60	C	59
A50		55	E29	B	58	E61	D	59
E11		58	E33	B	58	G3		61
E19	A	58	E35		58	Q3		64

: Relay Blocks

Code	See Page	Relay Blocks (Relay Block Location)
1	22	Engine Room R/B (Engine Compartment Left)

: Junction Block and Wire Harness Connector

Code	See Page	Junction Block and Wire Harness (Connector Location)
1A	24	Engine Room Main Wire and Engine Room J/B (Engine Compartment Left)
3C	36	Instrument Panel Wire and J/B No.3 (Instrument Panel Left)
3D		
3E		
3F		
3I		
3J		
3P		
3Q		
3S		
4C	42	Instrument Panel Wire and J/B No.4 (Instrument Panel Right)
4E		
4H		
4I		
4J		
4M		
DC	30	Engine Room Main Wire and Instrument Panel J/B (Lower Finish Panel)
DD		
DF	30	Instrument Panel Wire and Instrument Panel J/B (Lower Finish Panel)
DG	31	
DI		
DM	30	

: Connector Joining Wire Harness and Wire Harness

Code	See Page	Joining Wire Harness and Wire Harness (Connector Location)
AE1	69	Engine Room Main Wire and Instrument Panel Wire (Instrument Panel Right)
AE2	69	Engine Room Main Wire and Instrument Panel Wire (Instrument Panel Left)
EA1	69	Instrument Panel Wire and Engine Room Main Wire (Left Kick Panel)
EQ1	69	Instrument Panel Wire and Roof Wire (Front Pillar LH)
GE1	69	Instrument Panel No.3 Wire and Instrument Panel Wire (Instrument Panel Center)

: Ground Points

Code	See Page	Ground Points Location
A5	69	Cowl Side Left
E1	69	Left Side of the Instrument Panel Reinforcement
E2	69	Instrument Panel Brace LH